Technical Rider - Openair Show

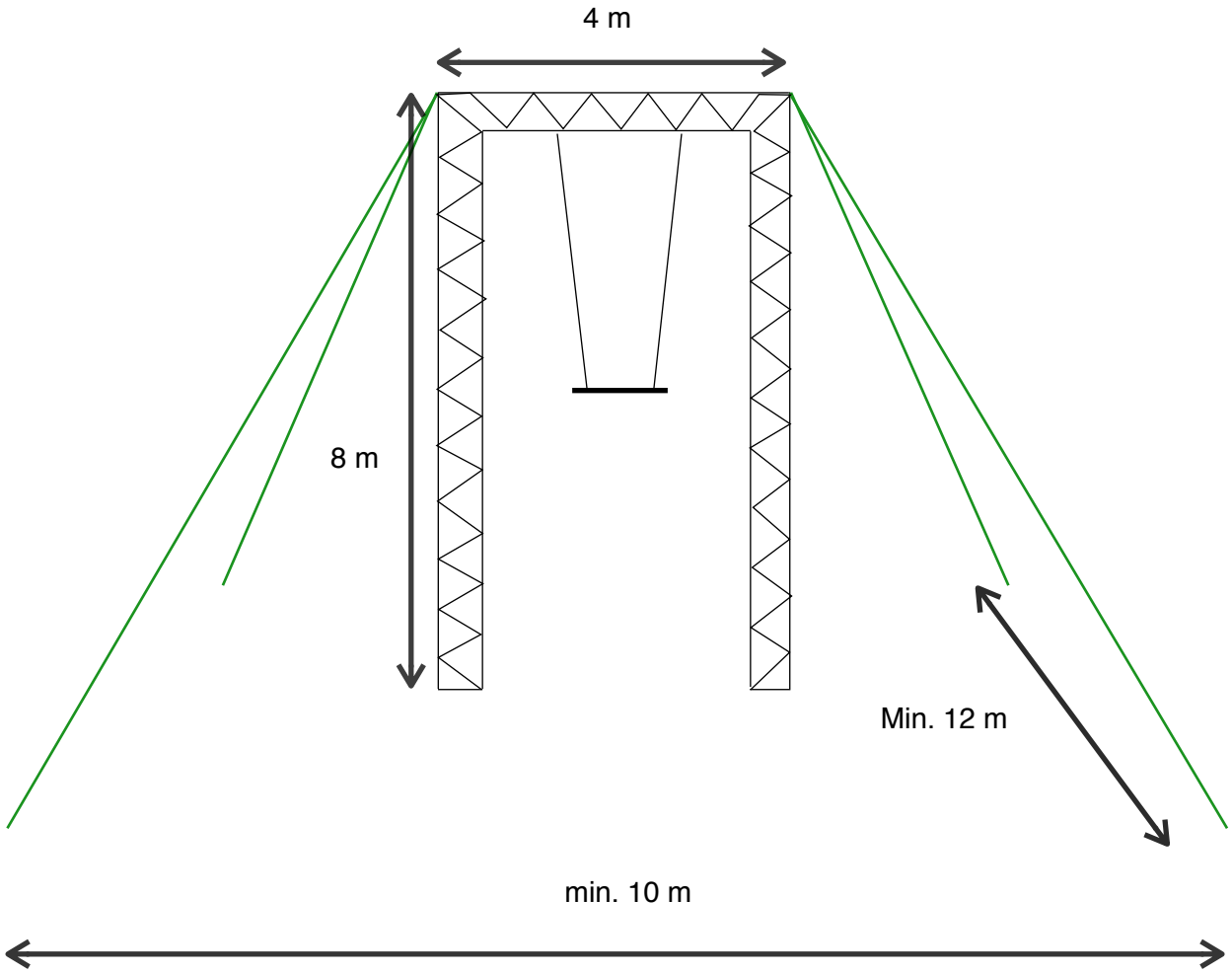

Flat ground in a rectangular area of at least 10 x 12m. Minimal clearance over the whole area: 9m.
Possibility to put ground nails in the corners. (Alternative: mobile fixing points of a minimum weight of 1000 kg in the corners.

Access with a van until close to the performance place must be guaranteed.

An appropriate sound system is provided by the organizer.

Contact: Marie Schmitz I +49 15751257830